TVK: Layer information
Layer 1: Component top, signal
Layer 2: Mixed signal
Layer 3: GND main
Layer 4: Power, RF Striplines, Audio to/from amplifier, mixed signal
Layer 5: Power, mixed signal
Layer 6: GND local, mixed signal
Layer 7: RFinterrface, mixed signal
Layer 8: Component bottom, signal

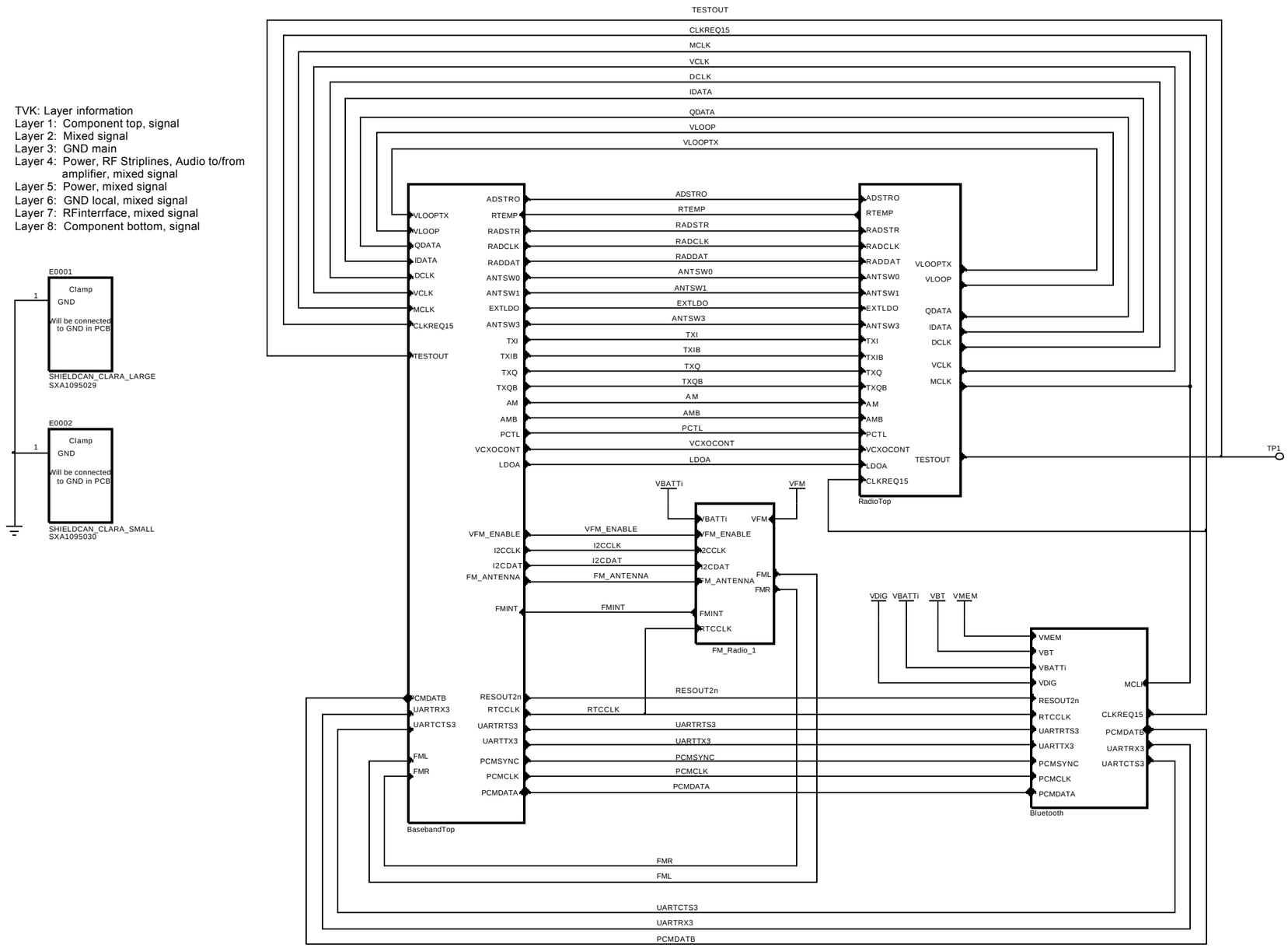

SCHEMA DIAGRAM

Sony Ericsson	Utarbetad av / Prepared (also subject responsible if other)	LD/SEM/BGUBDH Daniel Nilsson
Toleranser - Tolerances	Dokumentansvarig/Godkänd - Document responsible/Approved	LD/SEM/BGUBDH Paul Johansson
	Datum - Date	2006-03-15
	Rev	D
Titel - Name for	Produktbenämning - Product name	Helen RTL
Radio- Baseband- Bluetooth-FM-radio	Dokumentnr - Document nr	1911- ROA 128 1746
Ritningsregler - Drawing rules	Blad - Sheet	1 (1)

LZF 930 192/F R8

PDF processed with CutePDF evaluation edition www.CutePDF.com